AD 18,0 / 3,0 R
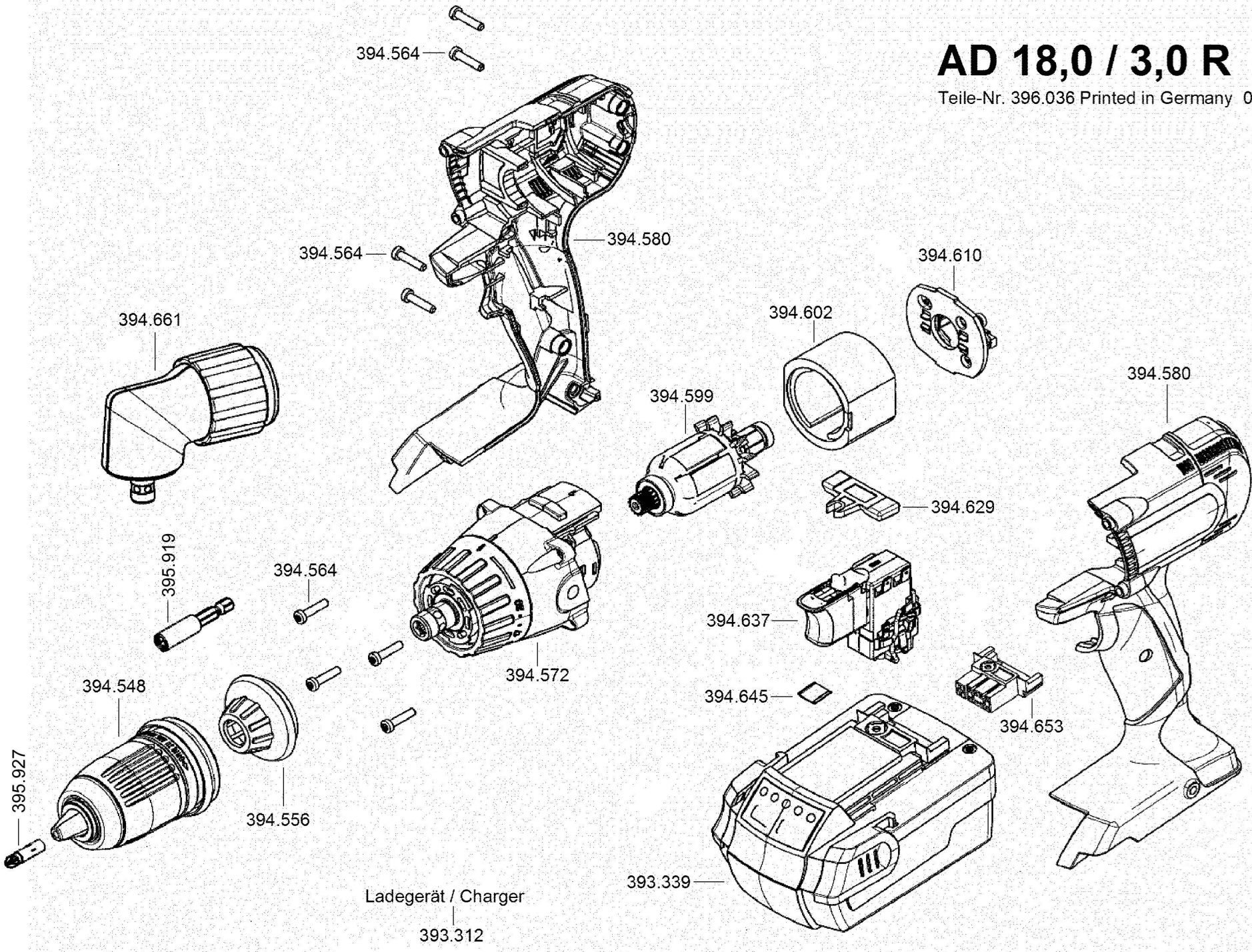
Teile-Nr. 396.036 Printed in Germany 07/12