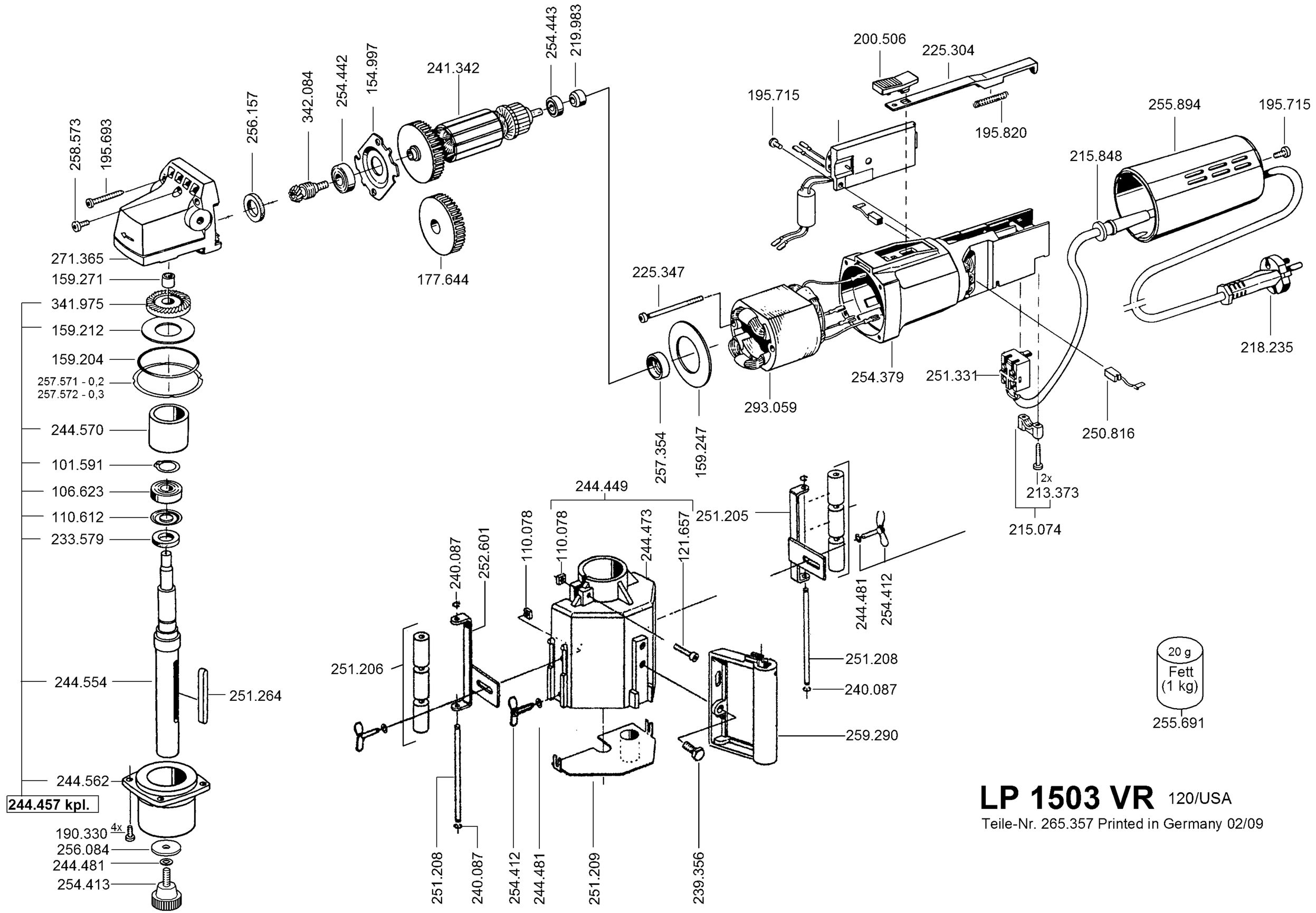

LP 1503 VR 120/USA

Teile-Nr. 265.357 Printed in Germany 02/09