L 1503 VR
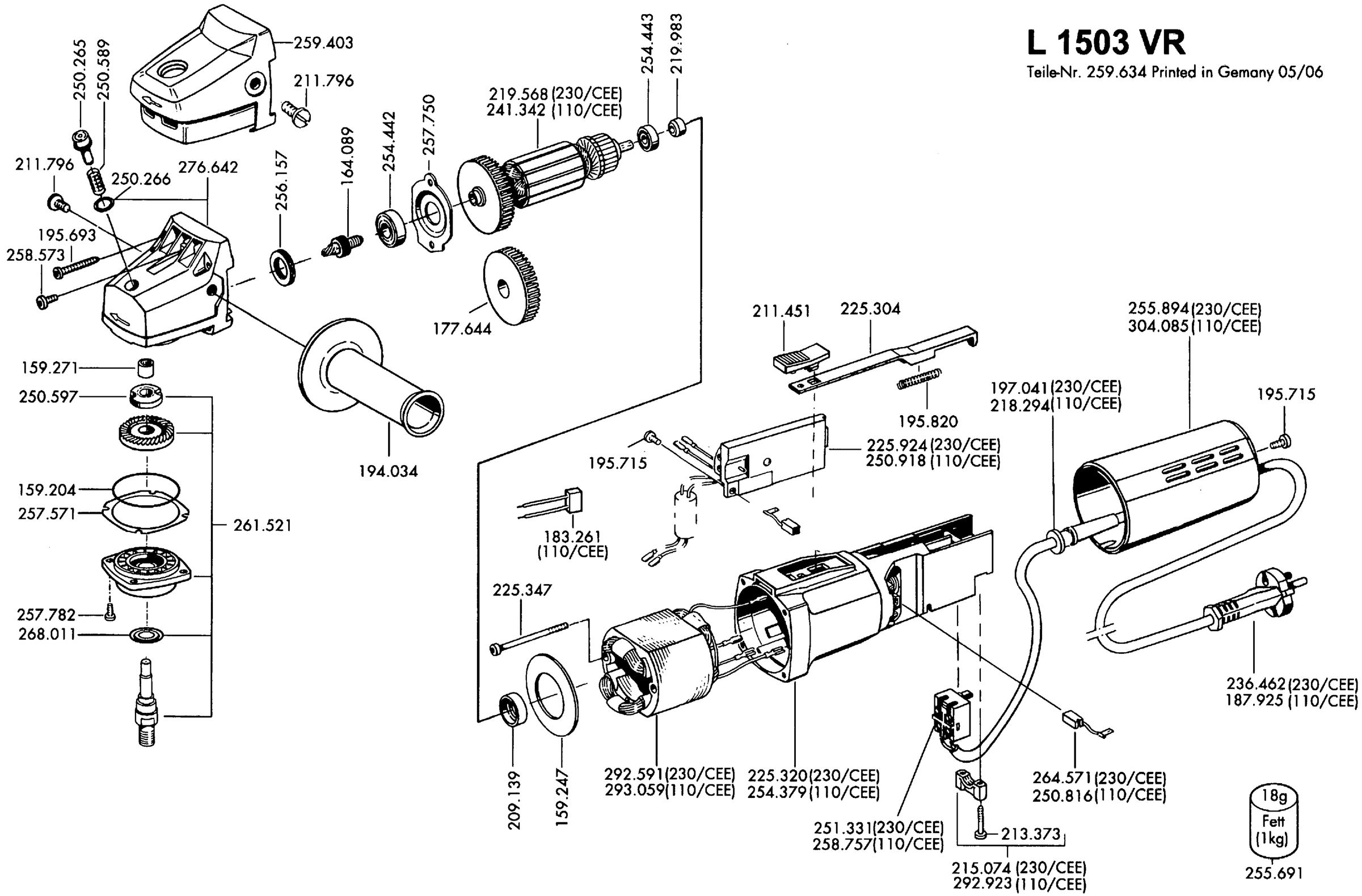
Teile-Nr. 259.634 Printed in Gemany 05/06