R 502 FR
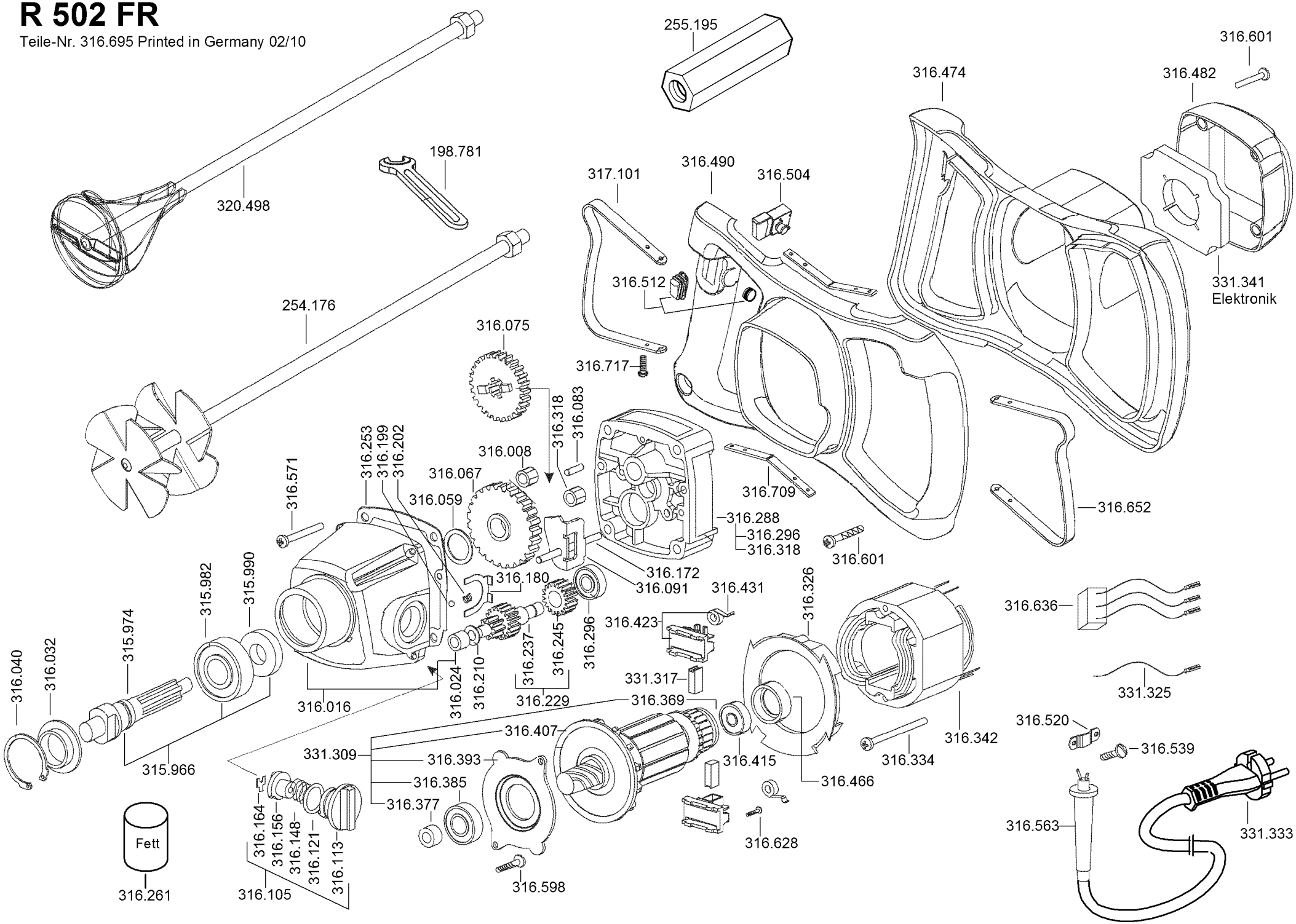
Teile-Nr. 316.695 Printed in Germany 02/10